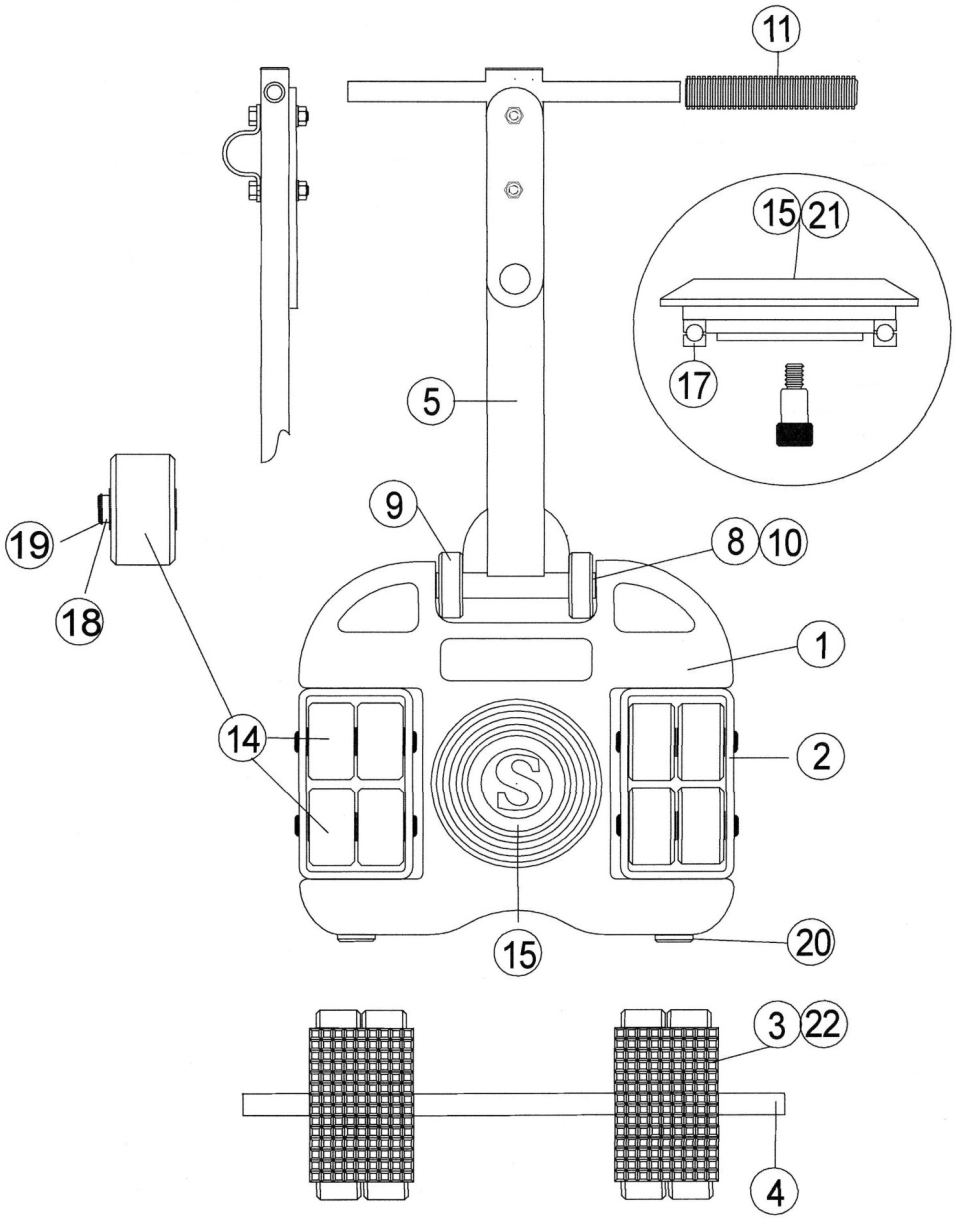

Item	Article no.	Description	Qty.
1	N4300005669	Front frame	1
2	N4300005671	Front wheel box casting	2
3	N4300005672	Rear trolley casting	2
4	N4300012841	Alignment bar	1
5	192086427	Handle assembly	1
8	N4300005704	Pivot shaft (handle)	1
9	N4300005676	Anti-tip roller	2
10	N4300005659	“R” clip (handle pin/pivot pin)	6
11	N4300002358	Rubber handle grip	2
14	N4300005679	Wheel assembly (black)	16
15	192086433	Turntable assembly (Turntable, bolt and Steerman decal)	1
17	N4300005683	Turntable bearing	1
18	N4300005661	Axle shaft (front & rear)	8
19	N4300005664	Circlip	16
20	N4300005684	Pivot pin	4
21	N4300005696	Anti-slip mat (front)	1
22	N4300005667	Anti-slip mat (rear)	2

SX20 STEERMAN LOAD MOVING SKATES

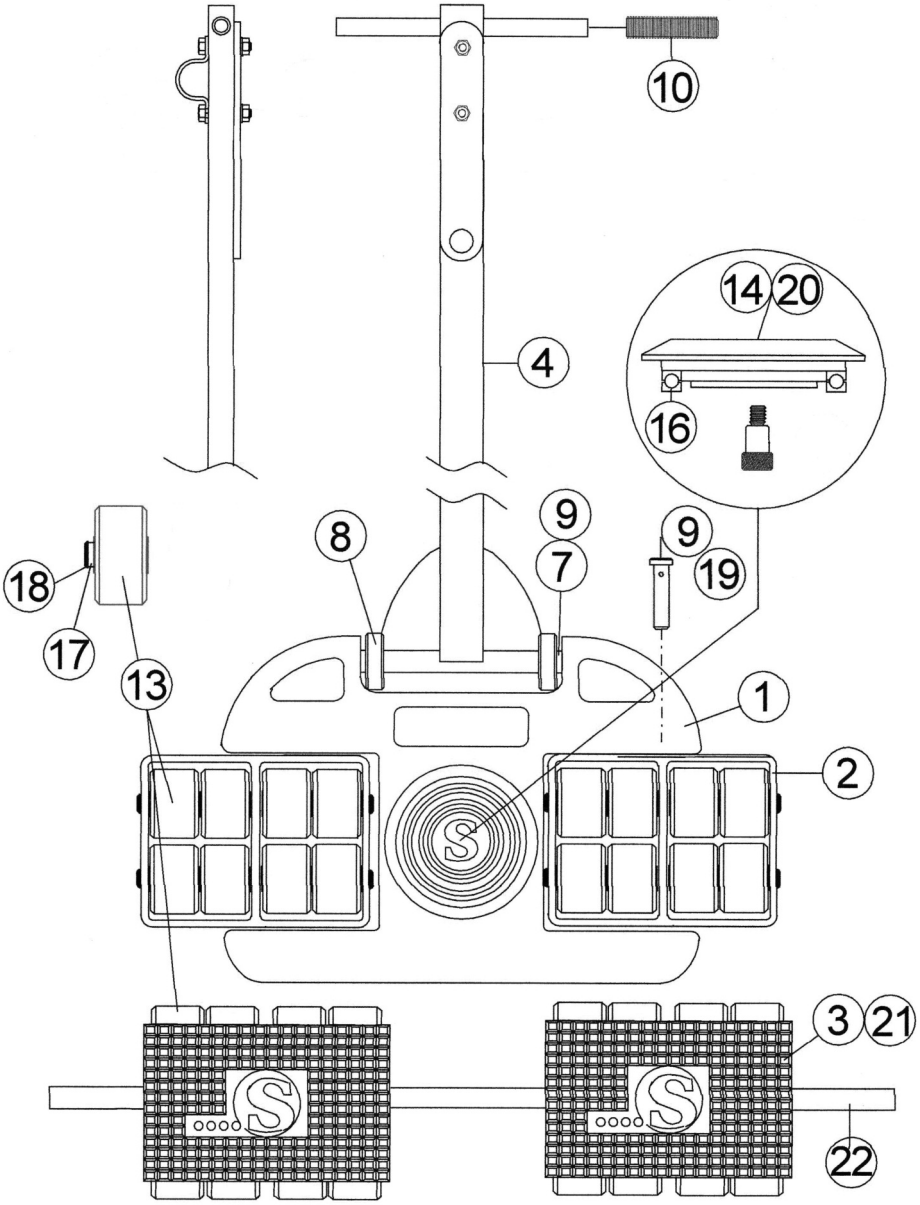

Item	Article no.	Description	Qty.
1	N4300005685	Front frame	1
2	N4300005686	Front wheel box casting	2
3	N4300005687	Rear trolley casting	2
4	192086430	Handle assembly	1
7	N4300005705	Pivot shaft (handle)	1
8	N4300005676	Anti-tip roller	2
9	N4300005659	“R” clip (handle pin/pivot pin)	6
10	N4300002358	Rubber handle grip	2
13	N4300005679	Wheel assembly (black)	32
14	192086433	Turntable assembly (Turntable, bolt and Steerman decal)	1
16	N4300005683	Turntable bearing	1
17	N4300005689	Axle shaft (front & rear)	8
18	N4300005664	Circlip	16
19	N4300005684	Pivot pin	4
20	N4300005696	Anti-slip mat (front)	1
21	N4300005645	Anti-slip mat (rear)	2
22	N4300012842	Alignment bar	1

SX30 STEERMAN LOAD MOVING SKATES

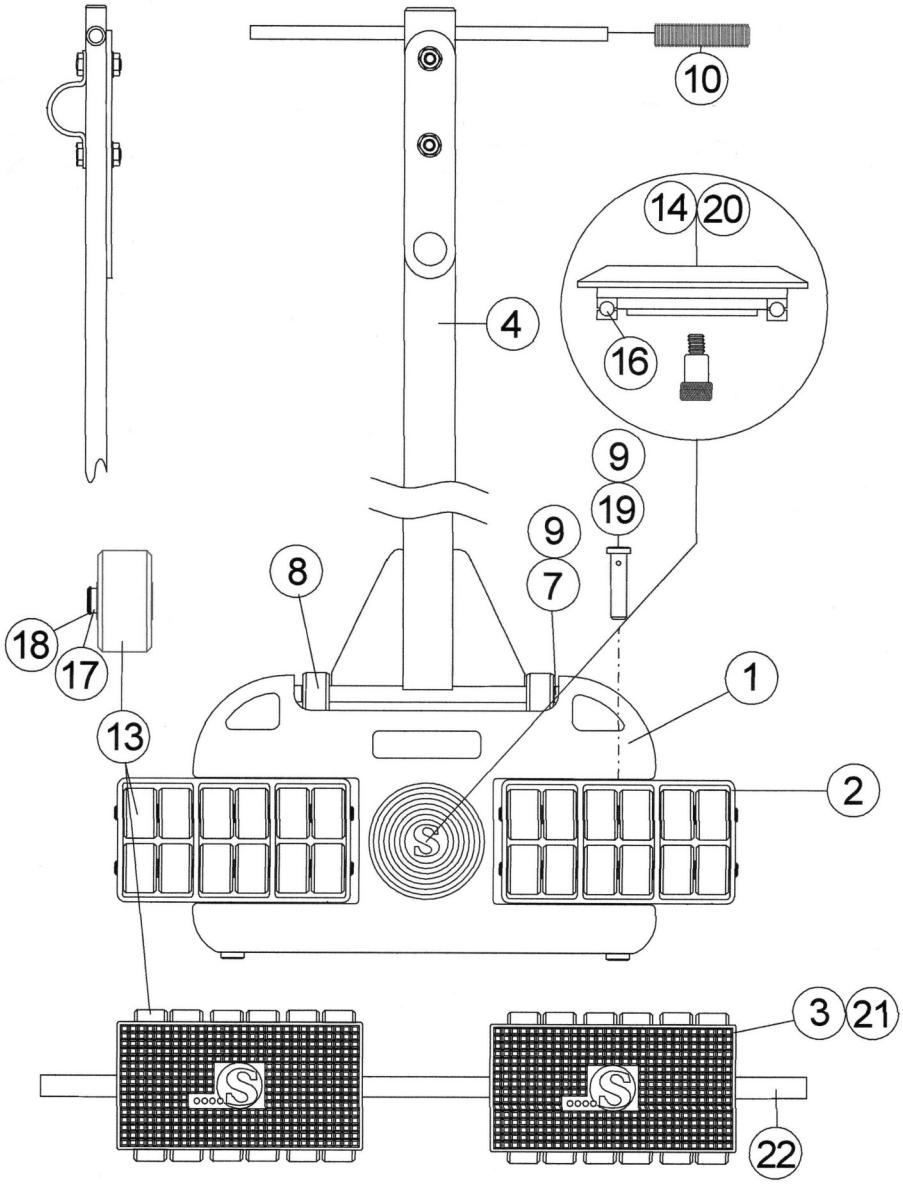

Item	Article no.	Description	Qty.
1	N4300005690	Front frame	1
2	N4300005691	Front wheel box casting	2
3	N4300005692	Rear trolley casting	2
4	192086431	Handle assembly	1
7	N4300005706	Pivot shaft (handle)	1
8	N4300005676	Anti-tip roller	2
9	N4300005659	“R” clip (handle pin/pivot pin)	6
10	N4300002358	Rubber handle grip	2
13	N4300005679	Wheel assembly (black)	48
14	192086434	Turntable assembly (Turntable, bolt and Steerman decal)	1
16	N4300005683	Turntable bearing	1
17	N4300005694	Axle shaft (front & rear)	8
18	N4300005664	Circlip	16
19	N4300005695	Pivot pin	4
20	N4300005696	Anti-slip mat (front)	1
21	N4300005698	Anti-slip mat (rear)	2
22	N4300012843	Alignment bar	1

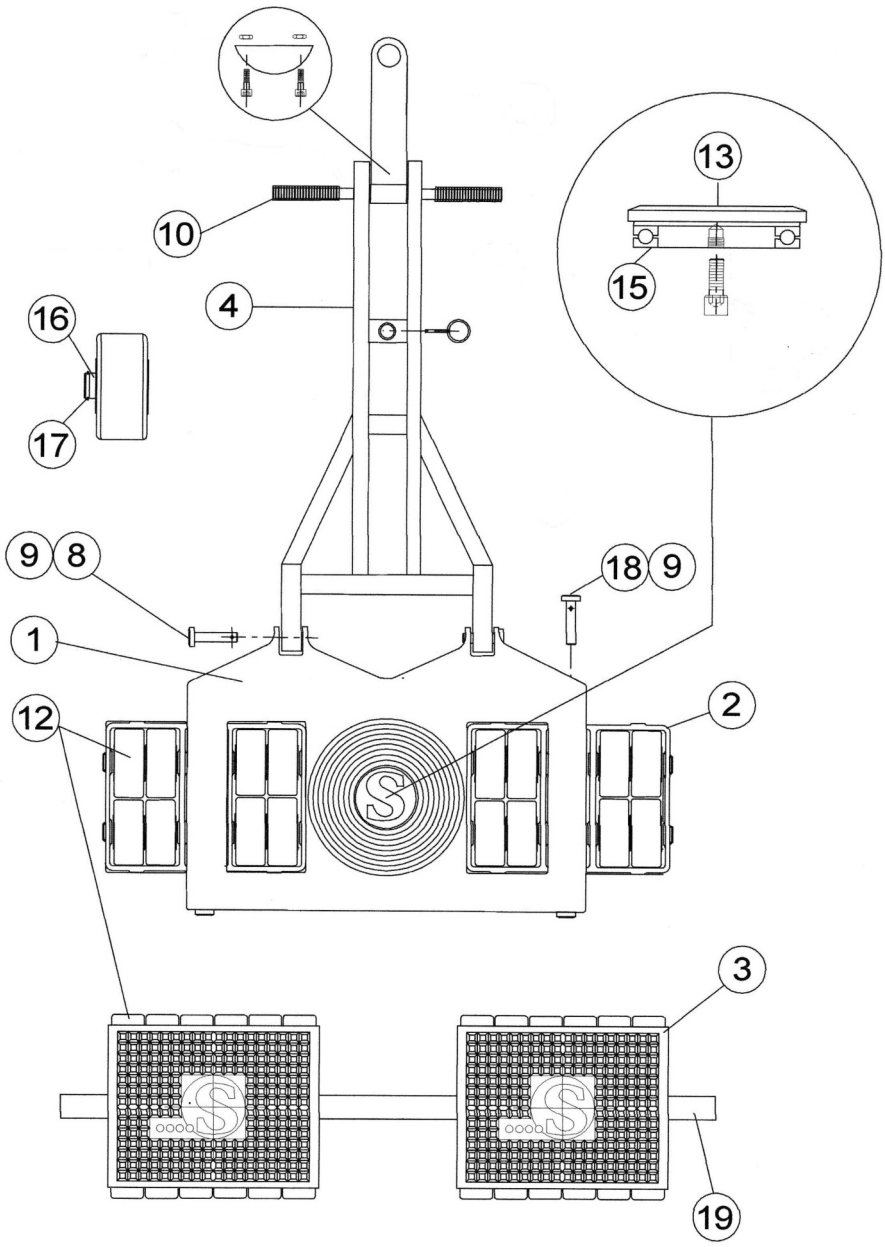

Item	Article no.	Description	Qty.
1	N4300005708	Front frame	1
2	N4300005709	Front wheel box casting	2
3	N4300005710	Rear trolley casting	2
4	192086432	Handle assembly	1
8	N4300005715	Pivot pin (handle)	2
9	N4300005716	“R” clip (handle pin/pivot pin)	6
10	N4300002358	Rubber handle grip	2
12	N4300005726	Wheel assembly (black)	48
13	192086435	Turntable assembly (Turntable, bolt and Steerman decal)	1
15	N4300005721	Turntable bearing	1
16	N4300005722	Axle shaft (front & rear)	8
17	N4300005723	Circlip	16
18	N4300005724	Pivot pin	4
19	N4300013832	Alignment bar	1